组会报告

蓝 鑫
2020年3月5日

Motivation

Convolutional neural networks based on multi-scale additive merging layers for visual smoke recognition

火有两种可以被检测的可视目标：火焰和烟。

火灾检测方法通常分为两类：可见火焰检测，可见烟雾检测。

传统烟雾检测手动提取特征，送入分类器。特征提取极大影响最后的分类结果。

传统方法具有高检测率，也有高误检率。

Architecture

Convolutional neural networks based on multi-scale additive merging layers for visual smoke recognition

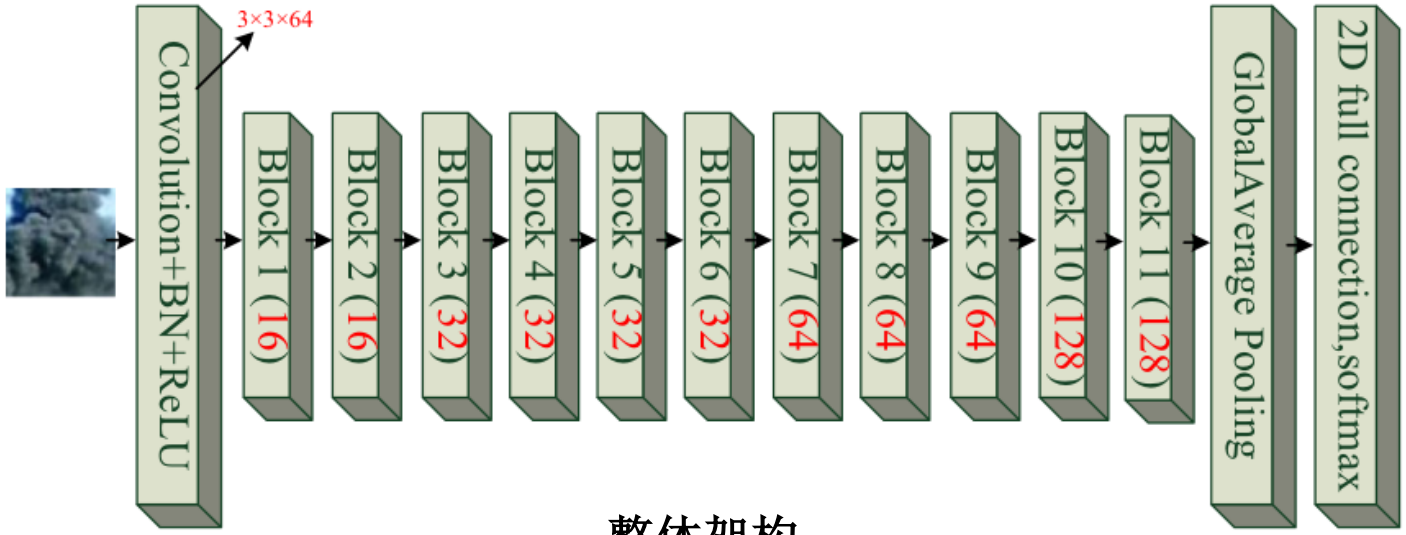

整体架构

卷积网络具有平移不变性，但是还需要尺度、旋转和光照不变性。因此提出多尺度卷积块。

选择相加有两个原因：1. 可以减少维度。2. 烟雾图像有不同特征，例如纹理、颜色和形状。

在块和块之间没有使用任何卷积核池化层。1. 使用相加融合特征图，所以需要所有层尺寸相同。2. 池化不是必要的，因为可以用卷积层替换。

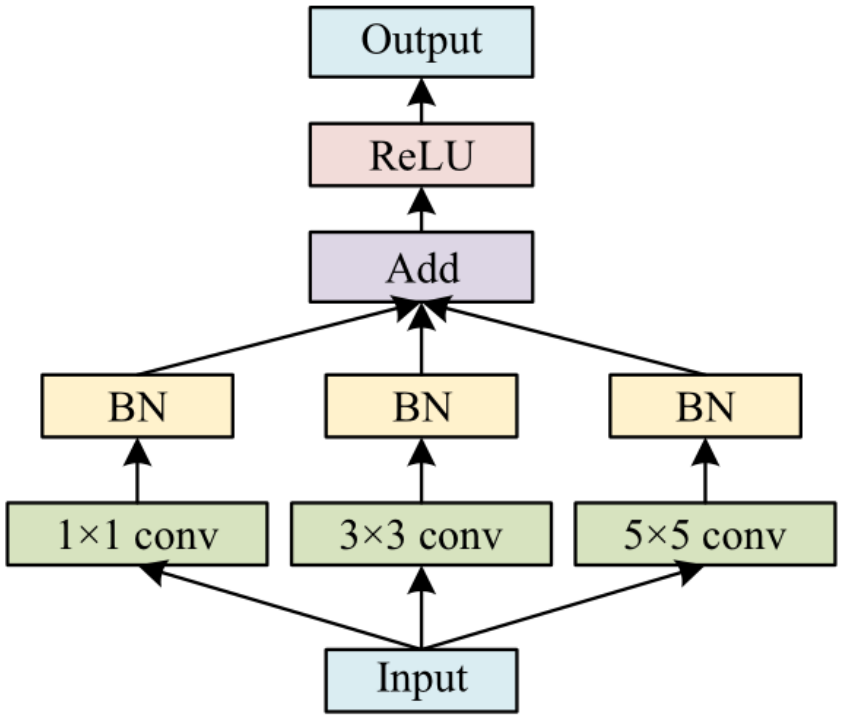

Block 结构

Data

Convolutional neural networks based on multi-scale additive merging layers for visual smoke recognition

烟雾图像

非烟雾图像

Performance

Convolutional neural networks based on multi-scale additive merging layers for visual smoke recognition

Models	Set1			Set2		
	DR/%	AR/%	FAR/%	DR/%	AR/%	FAR/%
ZF-Net [24]	93.29	97.18	**0.24**	94.33	97.01	0.73
VGG16 [24]	96.19	97.48	0.60	95.05	97.48	0.48
Inception-v3	93.66	96.82	1.08	93.60	96.68	0.73
DNCNN [24]	95.28	97.83	0.48	96.36	98.08	0.48
DMCNN	96.74	98.27	0.72	97.67	98.60	0.60
DMCNN_1	96.74	98.05	1.08	**98.69**	99.07	0.61
DMCNN_2	**97.28**	**98.63**	0.48	98.55	**99.14**	**0.36**

Bold indicates the best results

模型性能对比

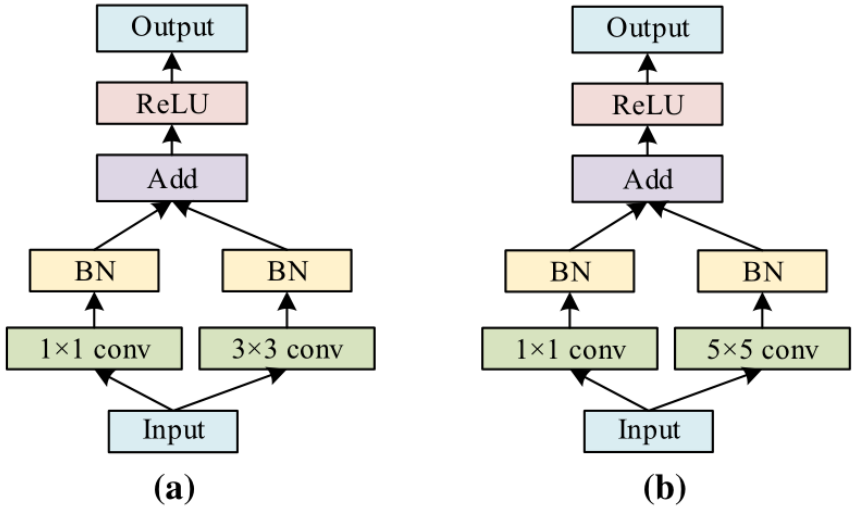

Fig. 5 Basic blocks for two variants of DMCNN. **a** Basic block of DMCNN_1; **b** Basic block of DMCNN_2

Models	Set1			Set2		
	DR/%	AR/%	FAR/%	DR/%	AR/%	FAR/%
DMCNN_2	**97.28**	**98.63**	**0.48**	**98.55**	**99.14**	**0.36**
DMCNN_C	96.20	98.05	0.72	97.24	98.54	0.37

Bold indicates the best results

Block 相加级联性能对比

Performance

Convolutional neural networks based on multi-scale additive merging layers for visual smoke recognition

Table 5 Results of methods with and without multiple scales

Models	Set1			Set2		
	DR/%	AR/%	FAR/%	DR/%	AR/%	FAR/%
DMCNN	96.74	98.27	0.72	97.67	98.60	0.60
DMCNN_1	96.74	98.05	1.08	**98.69**	99.07	0.61
DMCNN_2	**97.28**	**98.63**	**0.48**	98.55	**99.14**	**0.36**
DCNN_1	97.28	98.19	1.20	97.53	98.40	0.86
DCNN_2	96.55	98.26	0.60	97.67	98.60	0.61

Bold indicates the best results

Block 多尺度性能对比

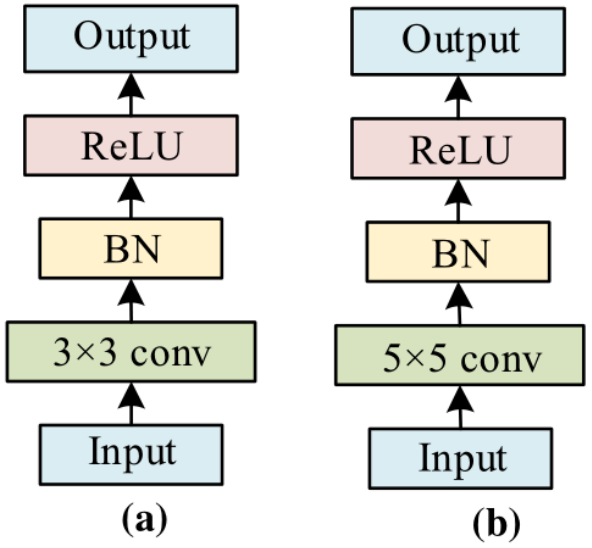

Fig. 9 Basic blocks for two methods without multiple scales. **a** Basic block of DCNN_1; **b** Basic block of DCNN_2

Feature maps

Convolutional neural networks based on multi-scale additive merging layers for visual smoke recognition

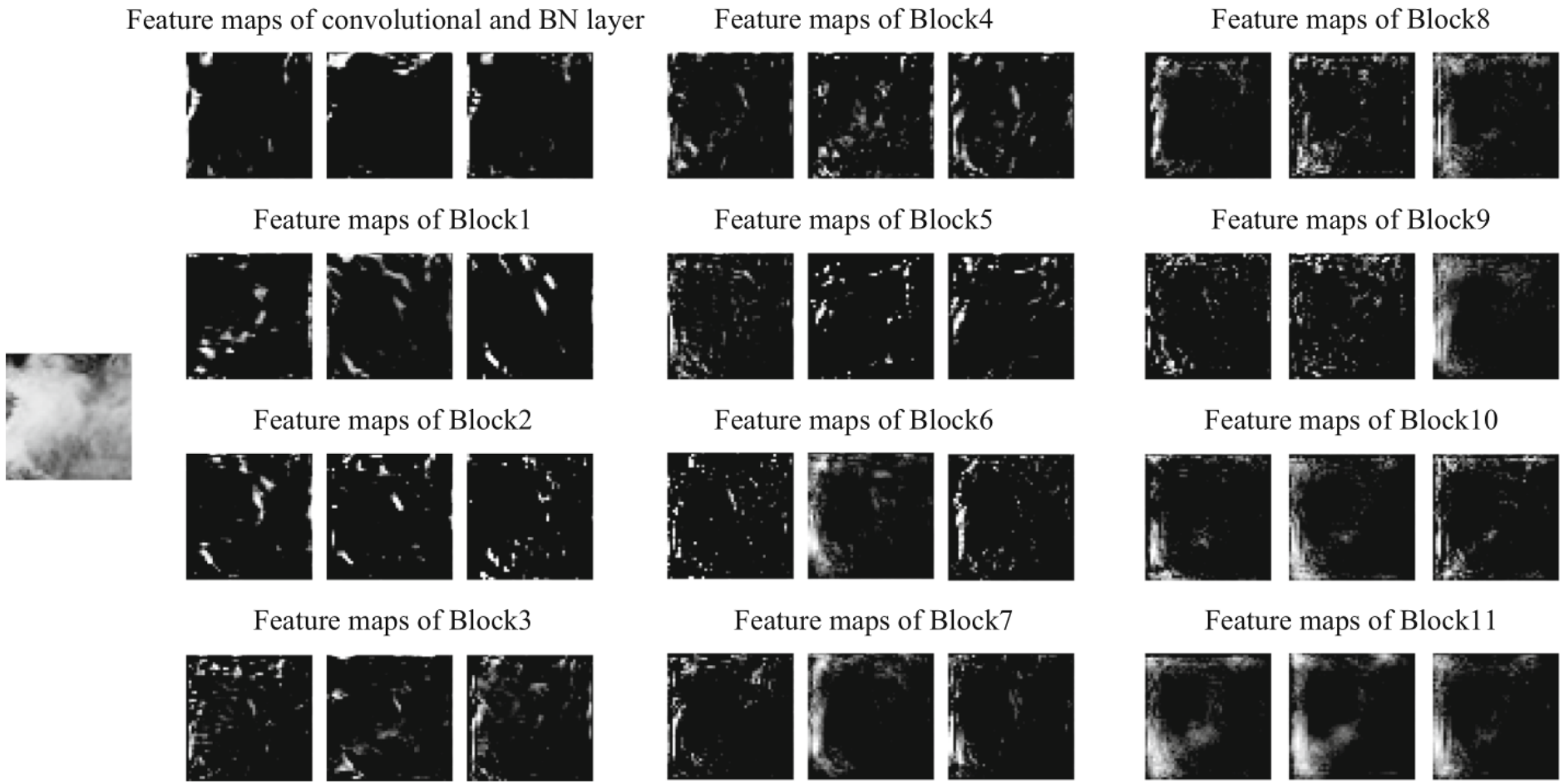

浅层纹理，深层语义